ITEM #

MODEL #

NAME #

SIS #

AIA #

Planetary Mixers
Planetary Mixer, 20 lt - Floor model - Electronic with Hub



600158 (DXBE20AB) — 20 lt planetary mixer, bowl detection device and SOLID BPA free safety screen, with electronic speed variation. Floor model. Equipped with spiral hook, paddle, whisk and H type accessory hub

Short Form Specification

Item No.

Floor model, suitable for all kneading, blending and whipping operations. Body in non-corrosive material with stainless steel 20 litre capacity bowl. Powerful asynchronous motor (900 W) with an electronic speed variator (10 speed levels from 30 to 180 rpm). Water protected planetary system. Removable/transparent solid safety screen - made of a bisphenol-A free (BPA) copolyester. Bowl detection device allows the mixer to switch on only when the bowl and the safety screen are properly installed and positioned together. Water proof (IP55) and flat touch button control panel with 60 min. timer, which switches off the machine at the end of the cycle. Start/stop button. Adjustable feet for stability. Equipped with accessory drive hub type H (accessories are not included). Supplied with 3 tools: spiral hook, paddle and whisk.

APPROVAL:

Main Features

- Professional beater mixer that provides all the basic mixer functions: kneading of all sort of pastes, mixing of semi-liquid products, emulsions and various sauces.
- Waterproof touch button control panel with timer, speed setting and display.
- Electronic speed variator.
- Maximum capacity (flour, with 60% of hydration) 6 kg, suitable for 50-150 meals per service.
- Raising and lowering of the bowl controlled by lever with an automatic locking of the bowl when in the raised position.
- Delivered with:
  - Spiral Hook, Paddle, Wire Whisk and Mixing Bowl for 20 lt
  - Accessory drive hub (accessories are not included)
- Solid BPA-free safety screen, covering the stainless steel wire one, limits the flour and unsafe dust particles when used in bakery and pastry preparation.
- Removable chute to add ingredients while working included as standard.
- Bowl detection device allows the mixer to switch on only when the bowl and the solid safety screen are properly installed and positioned together.

Construction

- Sturdy construction with mechanically welded strong metal frame.
- 302 AISI Stainless steel bowl - 20 lt. capacity.
- Asynchronous motor with high start-up torque.
- 10 speeds from 30 to 180 rpm (planetary movement), to adjust to the selected tool and mixture hardness.
- Planetary movement based on self lubricating gears, eliminating any risk of leaks.
- Water protected planetary system (IP55 electrical controls, IP34 appliance overall).
- Power: 900 watts.
- Body in non-corrosive material.
- The solid safety screen and the stainless steel wire structure are both removable and dismantled for cleaning and are dishwasher safe.
- Adjustable feet for perfect stability.

Included Accessories

- 1 of BOWL FOR 20LT MIXER — PNC 650121
- 1 of WHISK FOR 20LT MIXER — PNC 653109
- 1 of DOUGH HOOK FOR 20LT MIXER — PNC 653114
- 1 of PADDLE FOR 20LT MIXER — PNC 653116

Optional Accessories

- BOWL FOR 20LT MIXER — PNC 650121 ❑

• 10L BOWL,HOOK,PADDLE,WHISK FOR 20L MIXER	PNC 650122	❑
• WHISK FOR 20LT MIXER	PNC 653109	❑
• DOUGH HOOK FOR 20LT MIXER	PNC 653114	❑
• PADDLE FOR 20LT MIXER	PNC 653116	❑
• PUREE STRAINER FOR H HUB WITH 3 GRIDS	PNC 653187	❑
• VEGETAB.CUTTER H HUB+ EJECTOR-DISCONNECT.	PNC 653225	❑
• REINFORCED WHISK FOR 20LT MIXER	PNC 653254	❑
• KIT WHEELS FOR (XB)20/30/40L PLAN.MIXERS	PNC 653552	❑
• EXT.SUPPORT(ALUM)-MEAT MINCER 70MM-H HUB	PNC 653720	❑
• ALUM.MEATMINCER KIT 70MM-H HUB-ENTERPRIS	PNC 653721	❑
• S/S MEATMINCER KIT 70MM-H HUB-ENTERPRISE	PNC 653722	❑
• S/S MEATMINCER KIT 70MM-H HUB-½ UNGER	PNC 653723	❑

The company reserves the right to make modifications to the products without prior notice. All information correct at time of printing.

Planetary Mixers
Planetary Mixer, 20 lt - Floor model - Electronic with Hub

Front

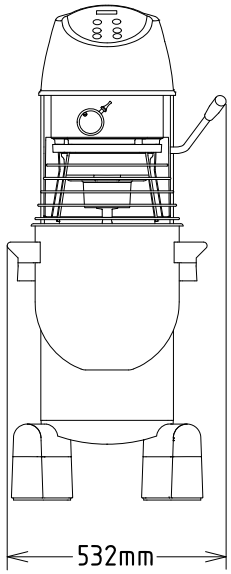

Side

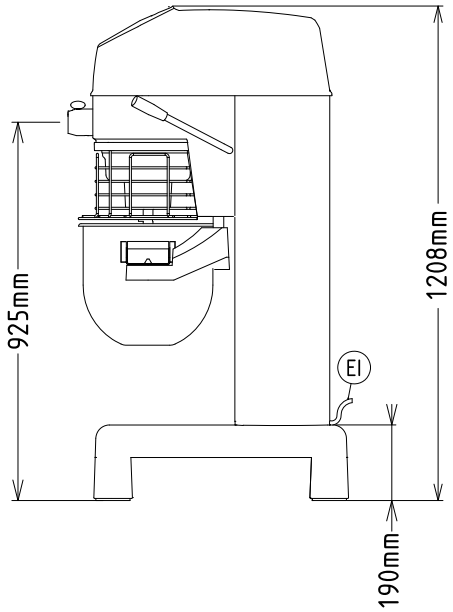

EI = Electrical inlet (power)

Top

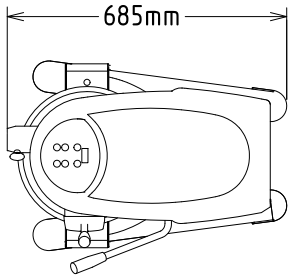

Electric

Supply voltage:	200-240 V/1N ph/50/60 Hz
Electrical power max.:	1.01 kW
Total Watts:	1.01 kW

Capacity:

Performance (up to):	6 kg/Cycle
Capacity:	20 litres

Key Information:

External dimensions, Width:	532 mm
External dimensions, Depth:	685 mm
External dimensions, Height:	1208 mm
Shipping weight:	107 kg
Net weight (kg):	95
Cold water paste:	6 kg with Spiral hook
Egg whites:	32 with Whisk

The company reserves the right to make modifications to the products without prior notice. All information correct at time of printing.

2026.11.19